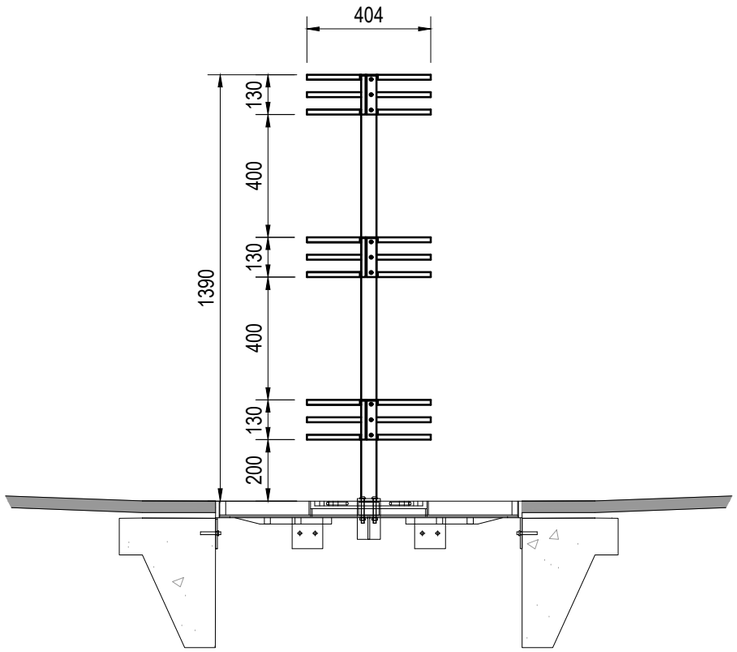

TREE GUARD WITH MOUNTING GRATE
FRONT ELEVATION

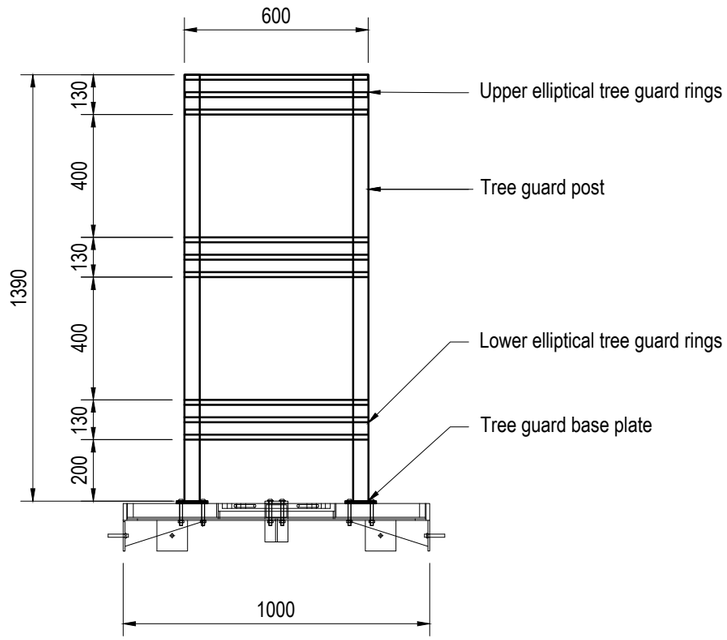

TREE GUARD WITH MOUNTING GRATE
SIDE ELEVATION

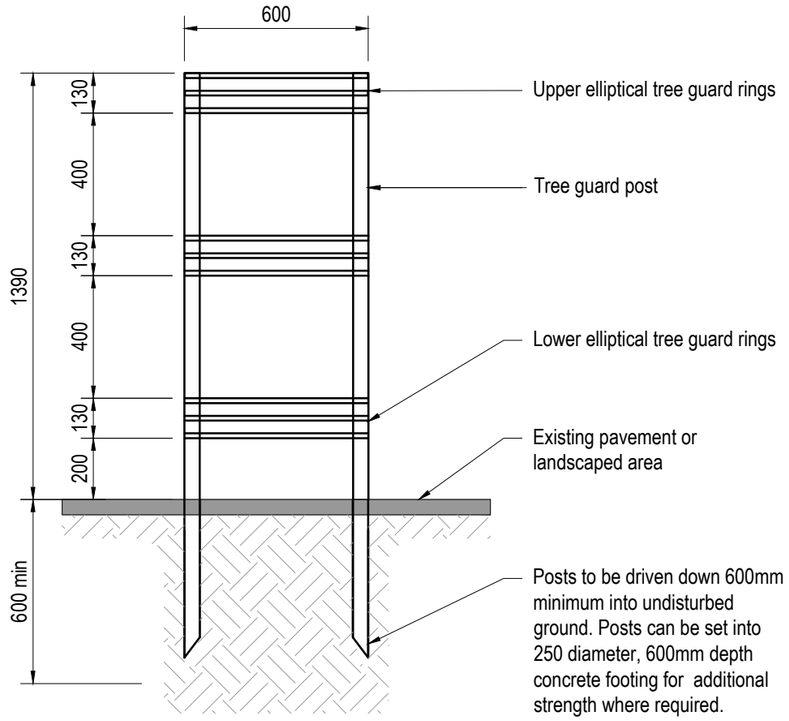

TREE GUARD DIRECT BURY
SIDE ELEVATION

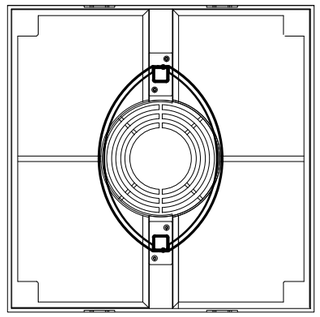

TREE GUARD WITH MOUNTING GRATE
PLAN

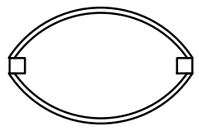

TREE GUARD DIRECT BURY
PLAN

NOTES:

1. Drawing in millimetres unless noted otherwise.
2. Installation of tree guard footing to be in accordance with manufacturer's specification and approved by Council on a case by case basis.
3. Mild steel, finish to be powder coated charcoal or black as approved by Council prior to installation.
4. Where excavation will occur, contractor must conduct a Dial Before You Dig (www.1100.com.au).

No	Revision	Date
A	APPROVED FOR USE	DEC 2020

Disclaimer:

The authors and sponsoring organisations shall have no liability or responsibility to the user or any other person or entity with respect to any liability, loss or damage caused or alleged to be caused, directly or indirectly, by the adoption and use of these Standard Drawings including, but not limited to, any interruption of service, loss of business or anticipatory profits, or consequential damages resulting from the use of these Standard Drawings. Persons must not rely on these Standard Drawings as the equivalent of, or a substitute for, project-specific design and assessment by an appropriately qualified professional.

CITY OF PORT PHILLIP

DRAWING NOT TO SCALE

Approved: Project Services

Date: Dec. 2020

Drawing Title: TREE GUARD AND GRATE

Original Size: A3

Drawing No: CPP3411

Rev: A

Plot Date: 22 December 2020 - 8:22 AM